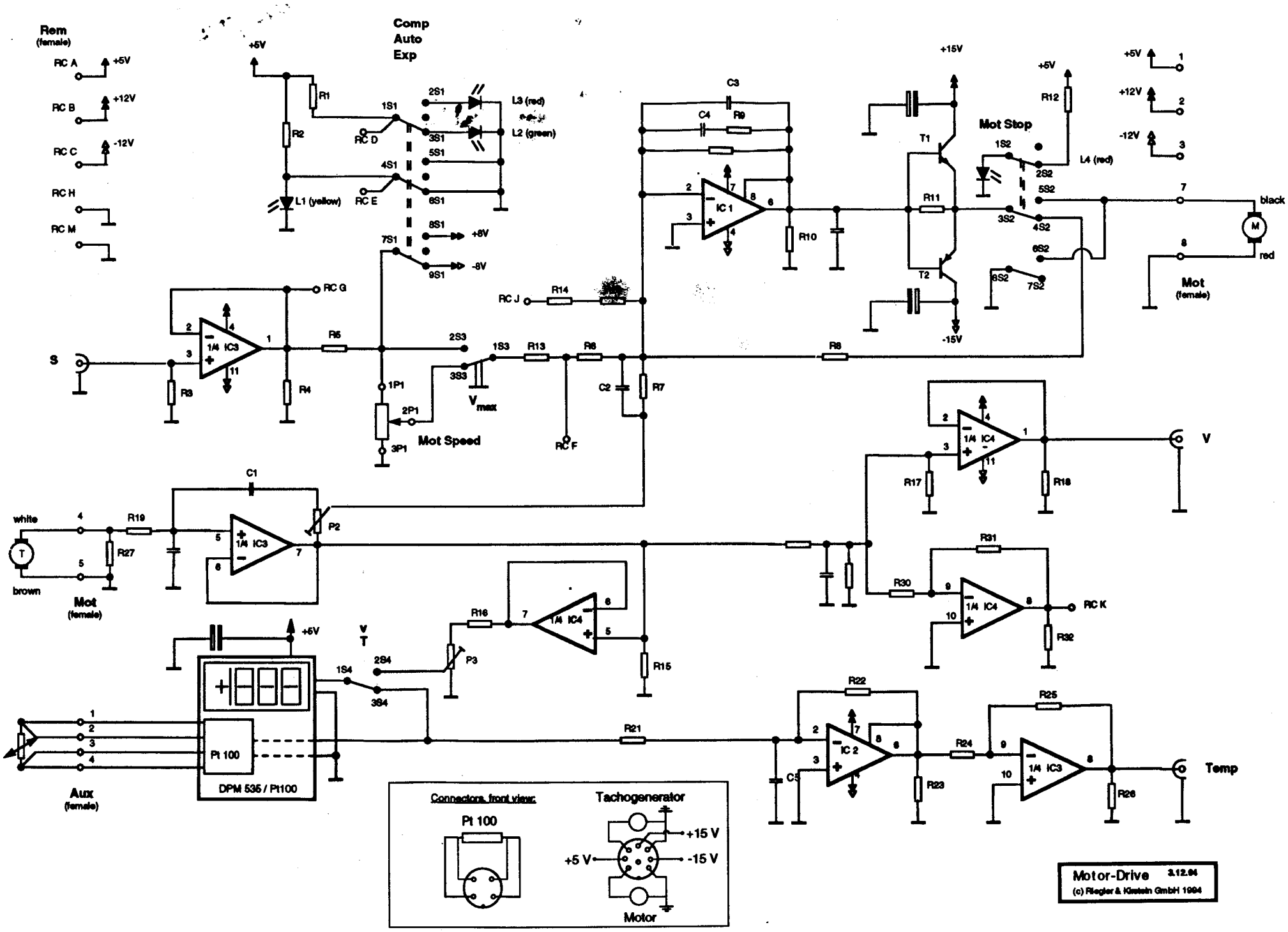
Rem
(female)
RC A
+5V
RC B
+12V
RC C
-12V
RC H
RC M
Comp
Auto
Exp
+5V
R1
R2
1S1
RC D
2S1
3S1
5S1
L3 (red)
L2 (green)
4S1
RC E
6S1
L1 (yellow)
8S1
+8V
7S1
9S1
-8V
RC G
S
R3
1/4 IC3
R4
R5
2S3
1S3
3S3
R13
R6
V max
1P1
2P1
3P1
Mot Speed
RC F
C2
R7
RC J
R14
C3
C4
R9
IC 1
R10
+15V
T1
R11
T2
-15V
R8
+5V
R12
Mot Stop
1S2
2S2
L4 (red)
5S2
3S2
4S2
6S2
8S2
7S2
+5V
+12V
-12V
1
2
3
7
8
black
red
M
Mot
(female)
1/4 IC4
R17
R18
V
C1
white
T
brown
R19
R27
P2
Mot
(female)
R31
R30
RC K
R32
R16
P3
R15
+5V
V
T
1S4
2S4
3S4
Pt 100
DPM 535 / Pt100
Aux
(female)
R21
R22
IC 2
C5
R23
R24
R25
R26
Temp
Connectors, front view:
Pt 100
Tachogenerator
+15 V
+5 V
-15 V
Motor
Motor-Drive 3.12.94
(c) Riegler & Kirstein GmbH 1994